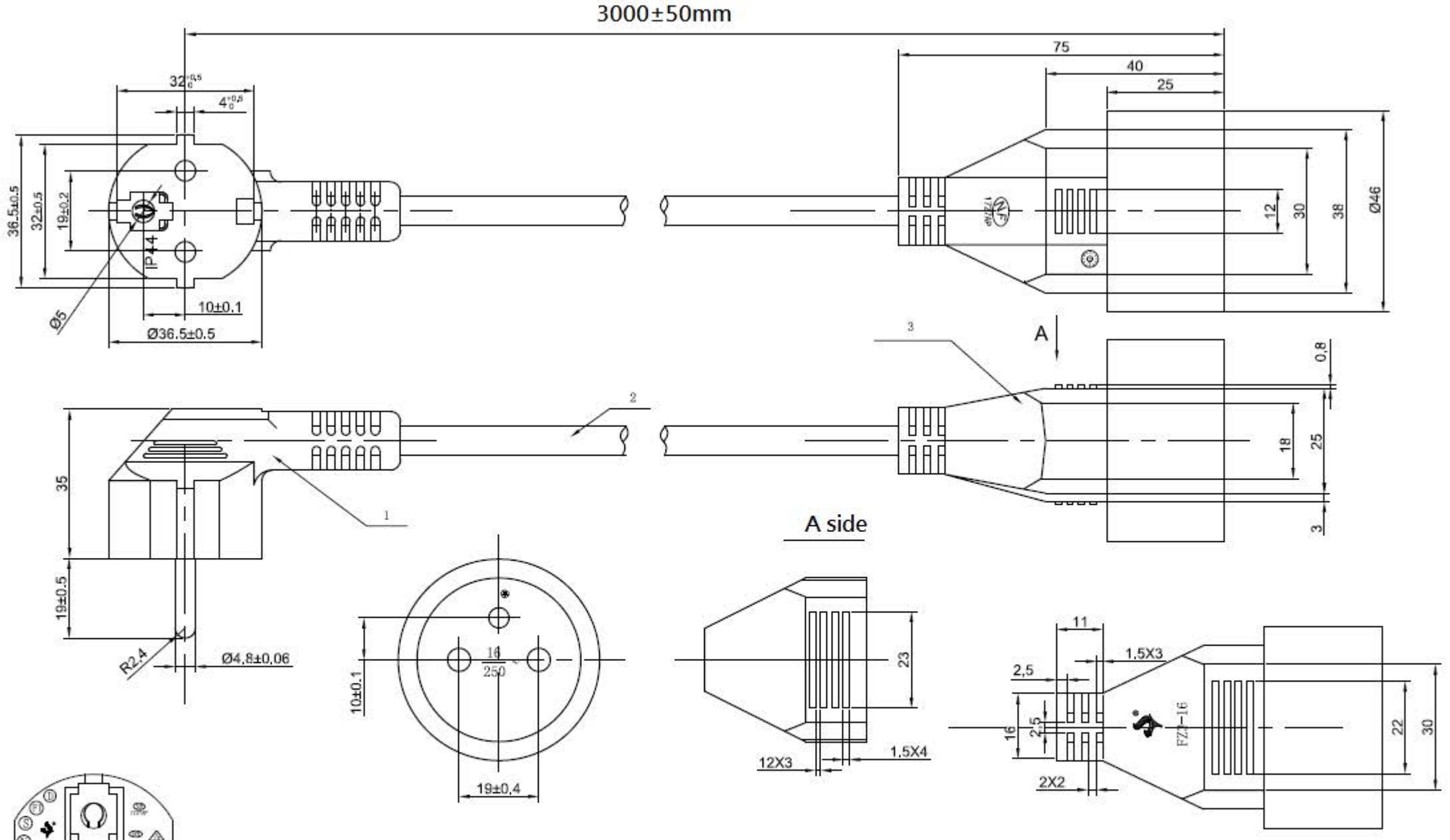

RoHS and REACH Compliant

Desc.	VALUE Schuko Extension Power Cord UTE, black, 3m	SECOMP			Material	PVC	
					Rated	16A 250V	
3.	Extension plug, FZ3-16	Item #	19.99.1170	EDITION	A4	Dr.No.	
2.	Flexible cable, H05VV-F 3G 1.5mm2	REVIEW				Color	black
1.	Schuko plug, JT003	APPROVE	VDE/NF			ALL DIMENSIONS IN mm	
Part	Description	DO NOT SCALE		DATE		2018-8-30	