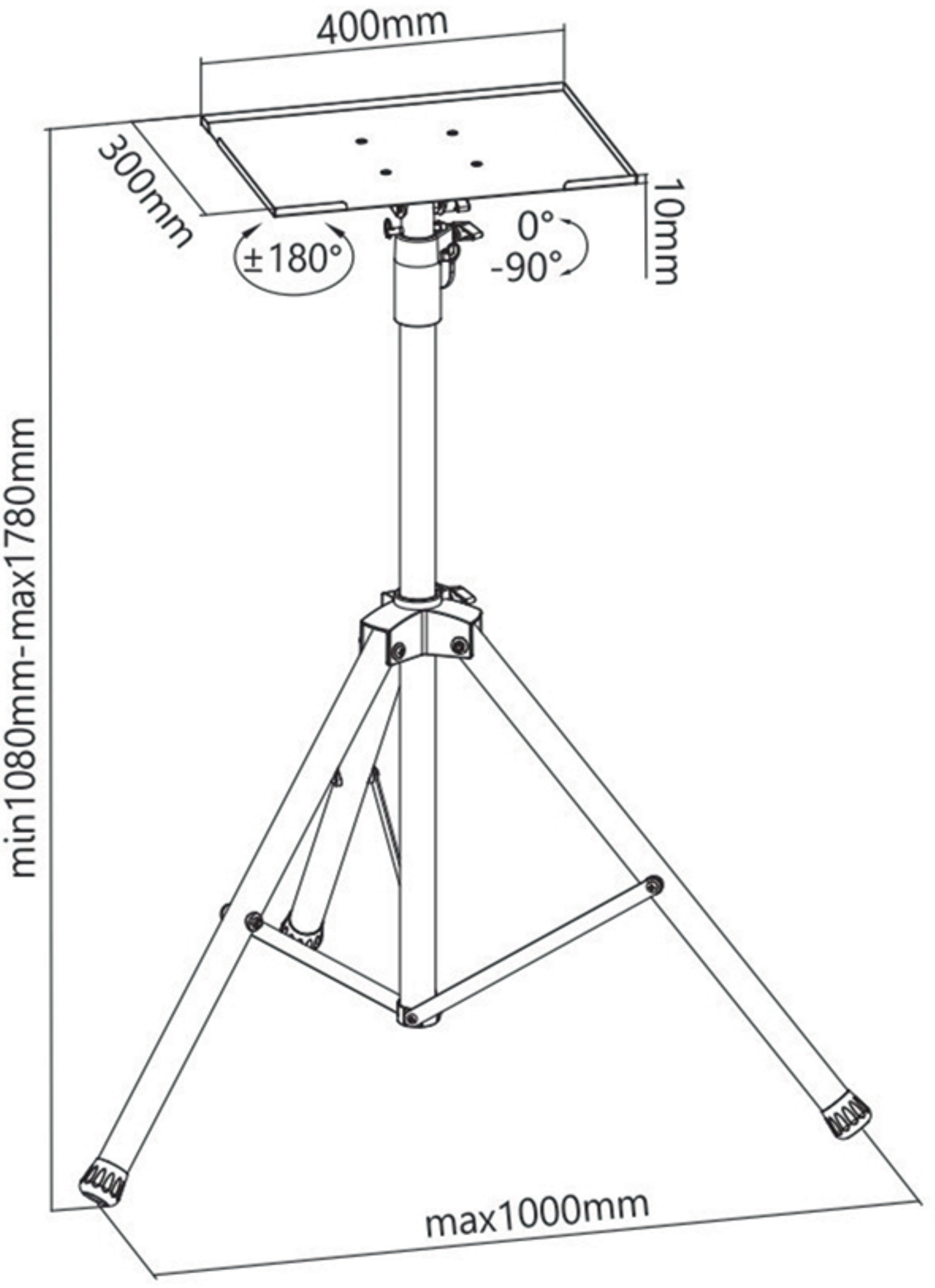
400mm
300mm
10mm
±180°
0°
-90°
min1080mm-max1780mm
max1000mm