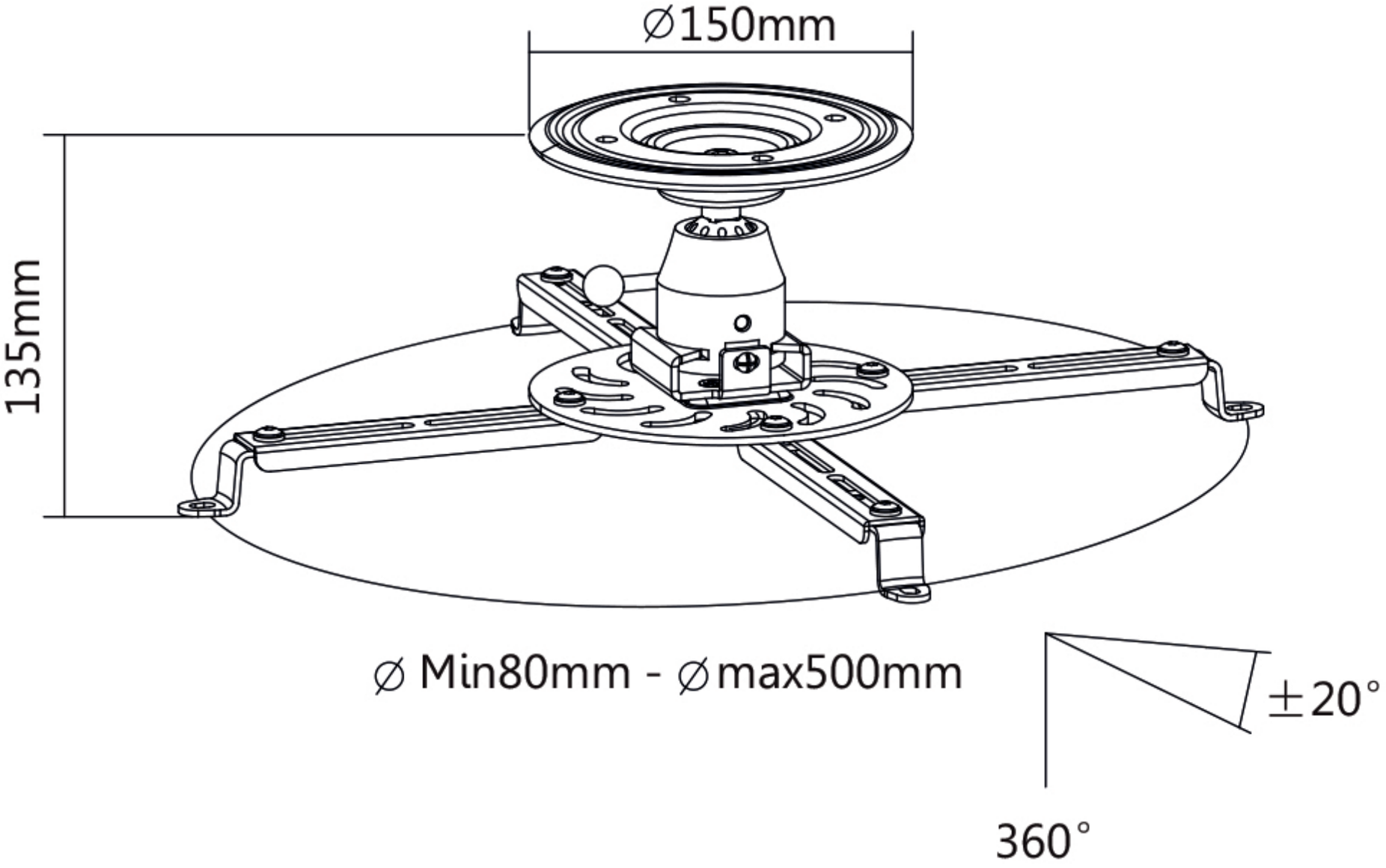
∅150mm
135mm
∅ Min80mm - ∅max500mm
±20°
360°