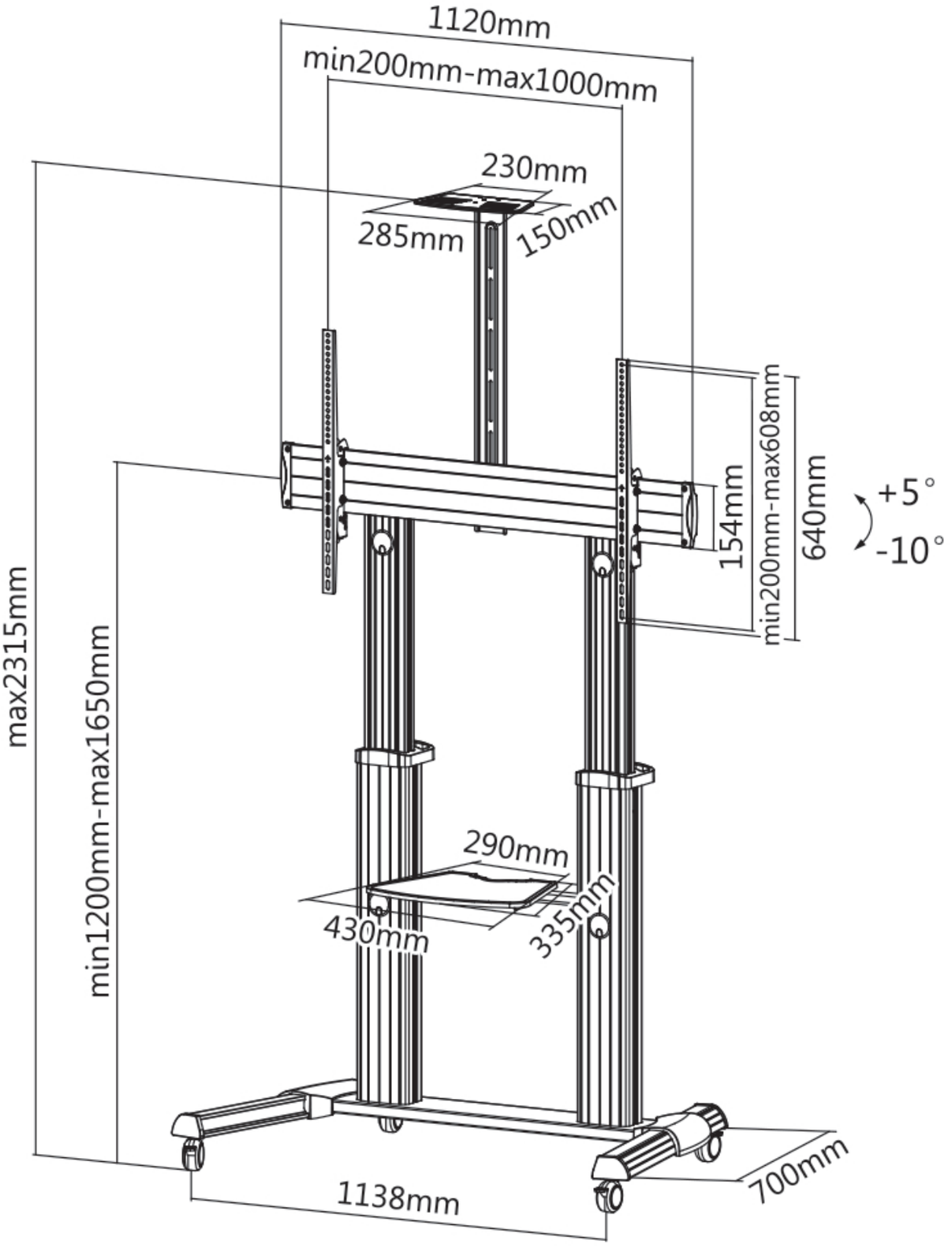
1120mm
min200mm-max1000mm
230mm
285mm
150mm
min200mm-max608mm
640mm
154mm
+5°
-10°
max2315mm
min1200mm-max1650mm
290mm
430mm
335mm
1138mm
700mm