Datenblatt - Fiche technique - Data sheet

11.99.5512

VALUE HDMI High Speed Verlängerungskabel/-station, mit Ethernet, mit Magnet, Stecker-Buchse, schwarz, 2,0 m

VALUE Câble HDMI High Speed avec Ethernet, avec aimant, M/F, noir, 2,0 m

VALUE HDMI High Speed Cable + Ethernet, with magnet, M/F, black, 2.0 m

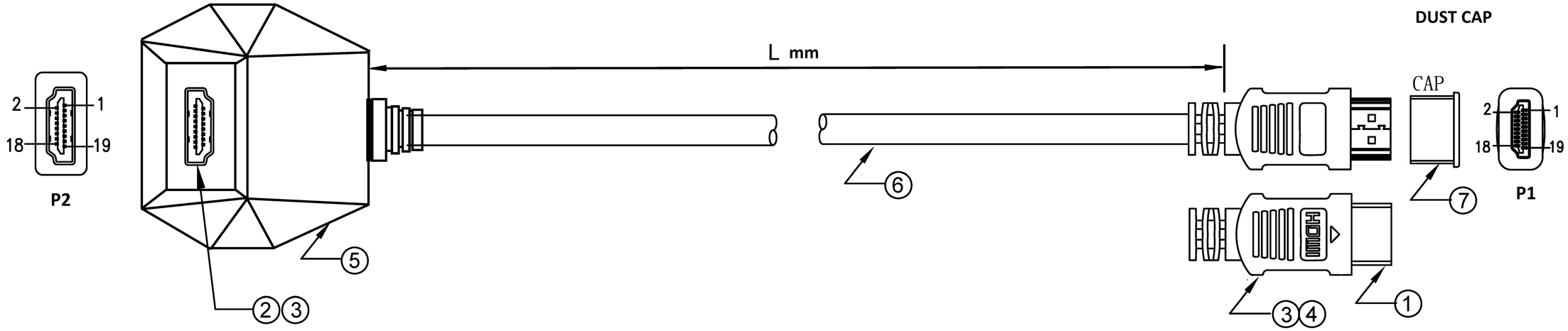

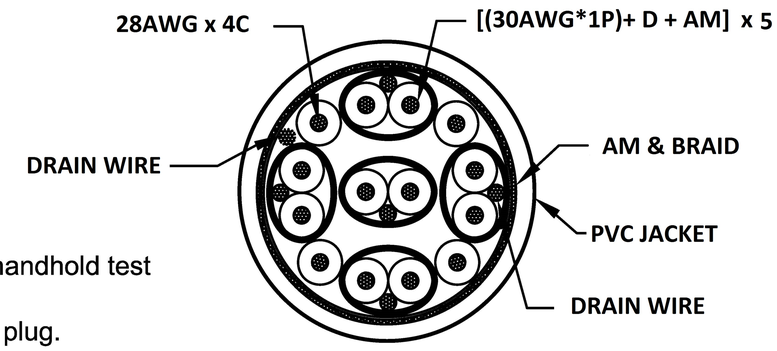

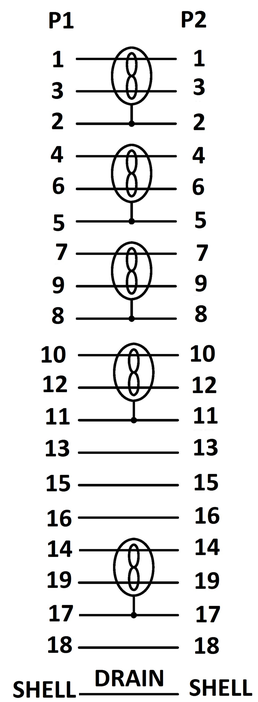

NOTE:

1.Electrical properties:

1.1 Tested by (quantum data) 780 handhold test Instrument for HDMI
480P , 720P , 1080P, +5V, Hot plug.
CEC, DDC, (EDID) PASS, 4K*2K/30Hz PASS

1.2 100% HDTV, BLUE-RAY DVD test PASS 1080P, 4K*2K/30Hz

CABLE PRINT: **E324703 AWM STYLE 20276 80℃ 30V HIGH SPEED HDMI® CABLE WITH ETHERNET**

MODEL LIST

Model	Length
11.99.5511	1000mm
11.99.5512	2000mm
11.99.5513	3000mm
11.99.5515	5000mm

MATERIAL LIST

No.	PART NAME	DESCRIPTION	QTY
⑦	DUST COVER	PE, COLOR: TRANSPARENT	1
⑥	CABLE	(30AWG BC * 1P + 30AWG BC + AM) * 5 + 28AWG BC * 4C + AM + 28AWG BC + 128/0.12 AL-MG + PVC OD: 7.3±0.1MM, COLOR: BLACK	L
⑤	SHELL	ABS SHELL COLOR: BLACK	1
④	OUTER MOLD	PVC	1
③	INNER MOLD	LD-PE	1
②	CONNECTOR	HDMI 19 PIN A FEMALE, GOLD PLATED PIN, GOLD PLATED SHELL	1
①	CONNECTOR	HDMI 19 PIN A MALE, GOLD PLATED PIN, GOLD PLATED SHELL	1

SECOMP

DESCRIPTION	VALUE HDMI Station, with Ethernet, M/F, with Magnet, black				
MODEL NO.	11.99.5511 , 11.99.5512 11.99.5513 , 11.99.5515	MAPE	TOLERANCE X. ±1.00 X.X ±0.50		
APPROVE BY	CHECK BY	DRAW BY	SCALE	MM	
			PAGE	1/1	